DMX512 decoder with RDM functionality features 5 PWM output channels with common anode. High PWM output frequency range allows the product to be used in HD video conferencing spaces.

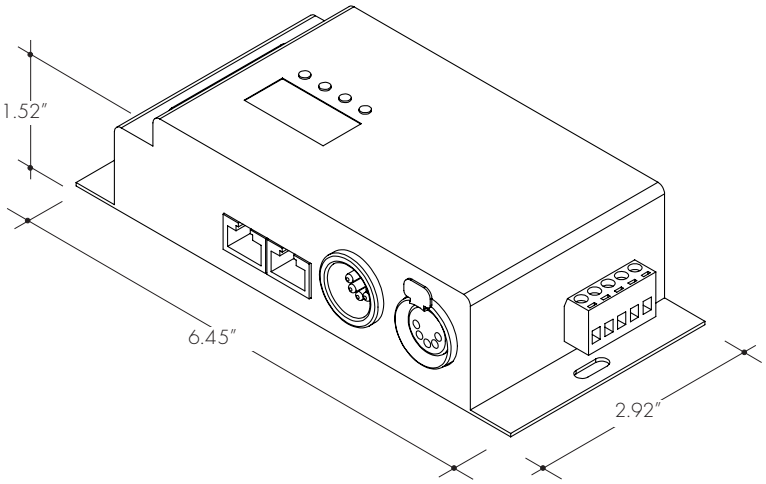


Input voltage
12 - 24 VDC

Power
96 Watt

Inputs
RJ45, XLR-5Pin, Terminal Block

DMX channels
1 to 5 settable

PWM output resolution ratio
8 or 16 bit

PWM output frequency
500Hz - 30KHz

Output dimming curve gamma value
0.1 ~ 9.9

ORDERING CODE

| Model |
| --- |
| DDMX-5CH-RDM-PRO |

DDMX-5CH-RDM-PRO - DMX512 Decoder